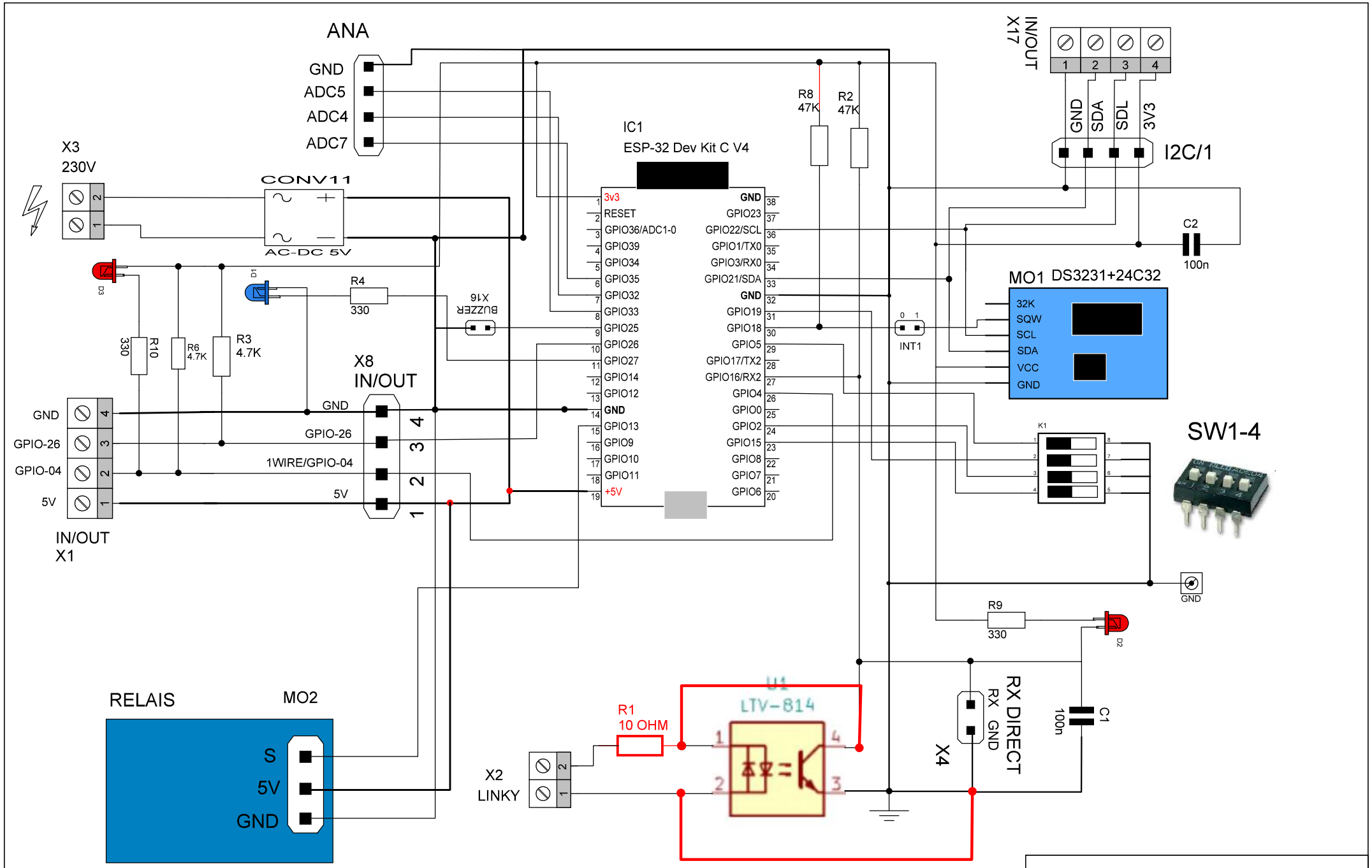

MULTI32 - POSTMAN	
BOARD MULTI ESP-32 F6GSG - 2024	03/08/24 V 1e